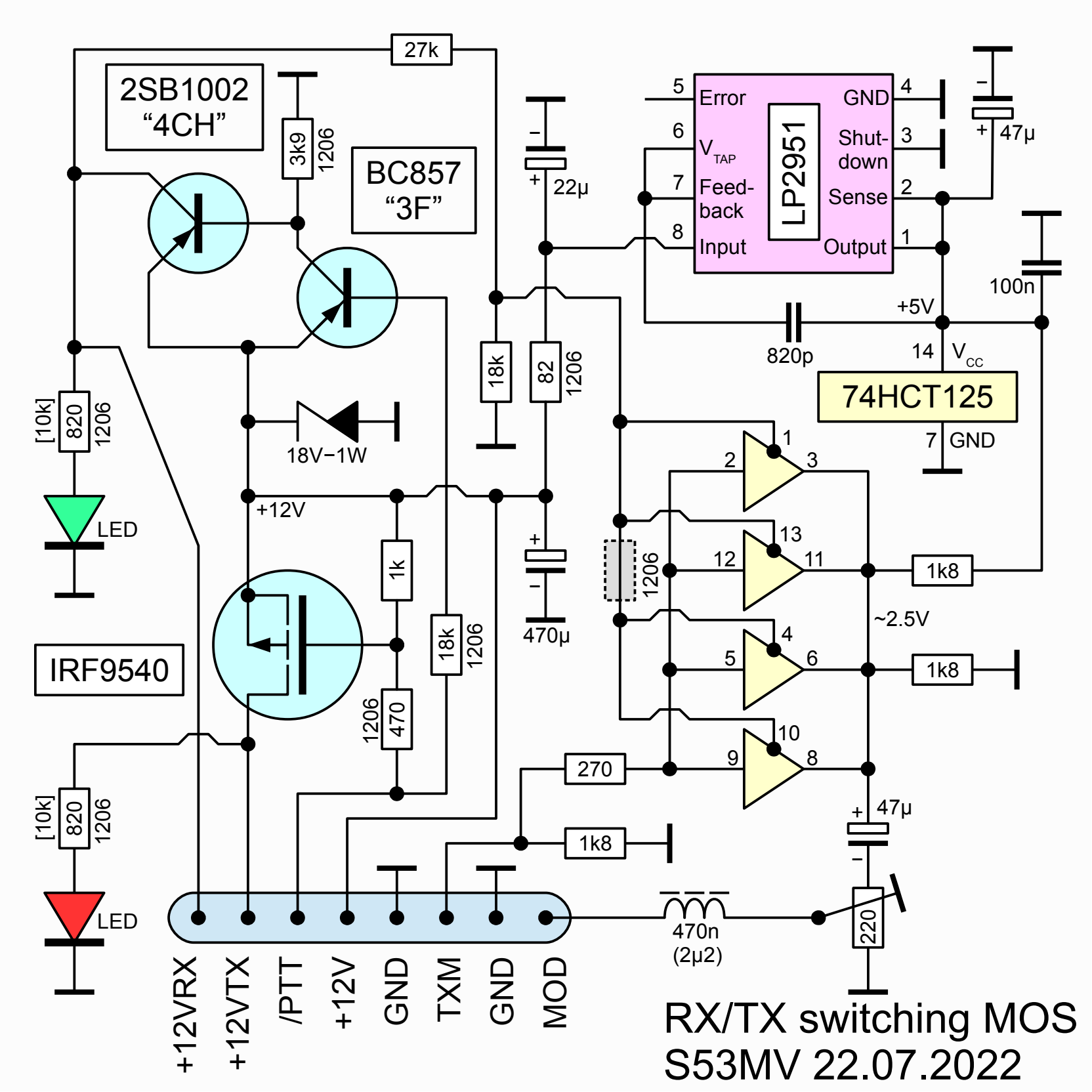
27k
2SB1002
"4CH"
3k9
1206
BC857
"3F"
22µ
5
Error
6
V_{TAP}
7
Feed-
back
8
Input
LP2951
GND
4
Shut-
down
3
Sense
2
Output
1
47µ
100n
+5V
820p
14
V_{CC}
74HCT125
7
GND
[10k]
820
1206
LED
18V−1W
18k
82
1206
+12V
1k
18k
1206
470µ
1206
470
IRF9540
1206
1
2
3
13
12
11
4
5
6
10
9
8
1k8
~2.5V
1k8
270
1k8
47µ
[10k]
820
1206
LED
470n
(2µ2)
220
+12VRX
+12VTX
/PTT
+12V
GND
TXM
GND
MOD
RX/TX switching MOS
S53MV 22.07.2022