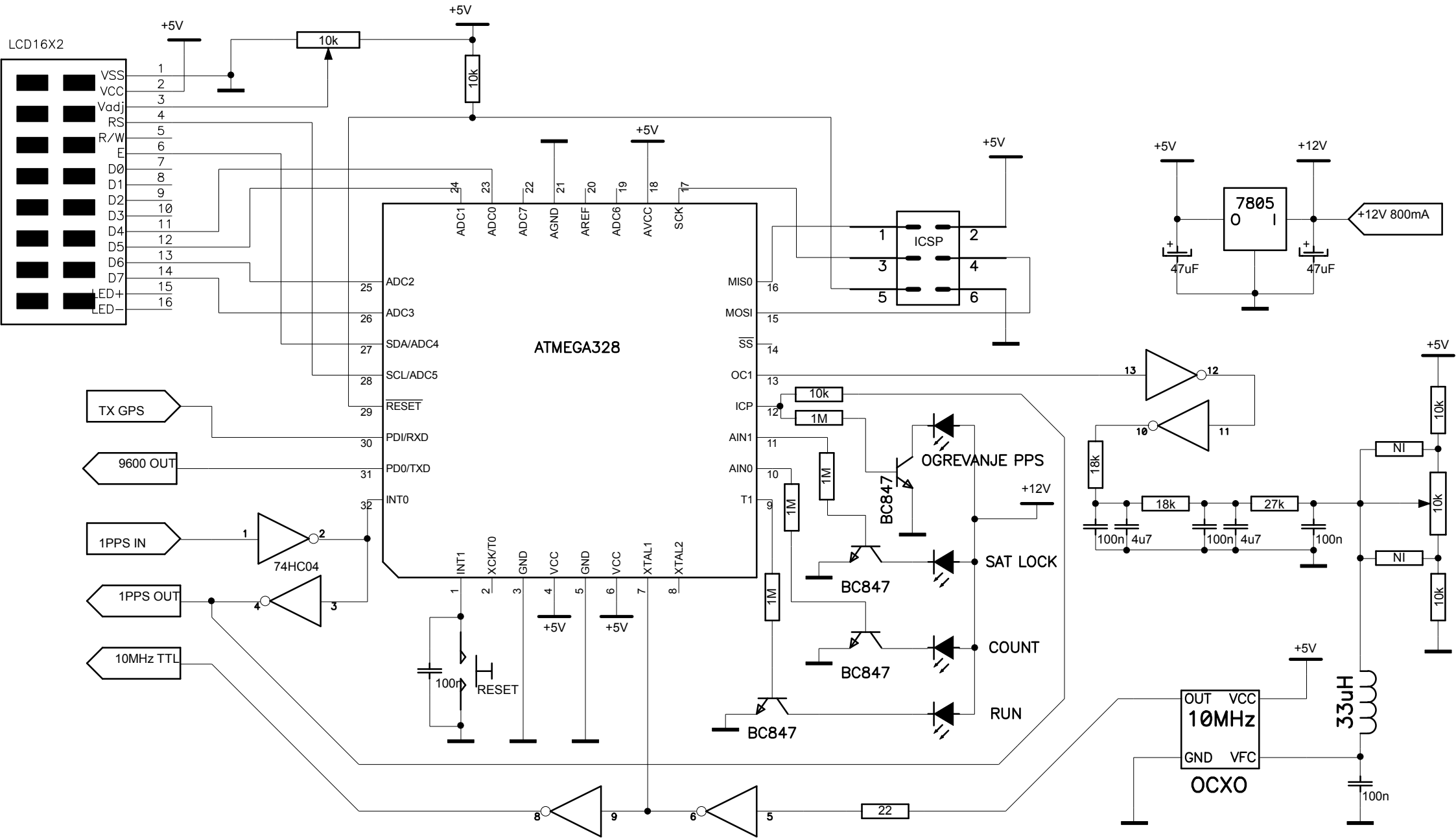
LCD16X2
VSS
VCC
Vadj
RS
R/W
E
D0
D1
D2
D3
D4
D5
D6
D7
LED+
LED−
+5V
10k
ATMEGA328
ADC1
ADC0
ADC7
AGND
AREF
ADC6
AVCC
SCK
ADC2
ADC3
SDA/ADC4
SCL/ADC5
RESET
PDI/RXD
PD0/TXD
INT0
MIS0
MOSI
SS
OC1
ICP
AIN1
AIN0
T1
INT1
XCK/T0
GND
VCC
XTAL1
XTAL2
ICSP
TX GPS
9600 OUT
1PPS IN
1PPS OUT
10MHz TTL
74HC04
100n
RESET
1M
BC847
OGREVANJE PPS
SAT LOCK
COUNT
RUN
+12V
22
7805
+12V 800mA
47uF
18k
27k
4u7
NI
33uH
OUT
VCC
10MHz
GND
VFC
OCXO