	Mountaineering and Climbing Equipment **Snow Anchors** **("Dead Man")**	**UIAA** **154**

Foreword

This UIAA Standard is only published in the English language, which is the master text. If anybody requires help in validating a translation into French, German, Italian or Spanish, the corresponding National Delegate of the UIAA Safety Commission should be contacted via the UIAA Office in Bern, Switzerland.

The UIAA Standards are reviewed at intervals to see whether they meet the latest technical requirements and revised, if necessary.

The UIAA invites manufacturers of mountaineering and climbing equipment worldwide to become Trade Members of the UIAA Safety Commission. Trade Members can participate in discussions on standard requirements, test methods, and revisions thereof (see the General Regulations for the UIAA Label).

A complete list of UIAA Standards for mountaineering and climbing equipment can be found on the UIAA Website.

The UIAA Safety Commission, which is responsible for the UIAA Standards, expects that CEN will include this UIAA Standard into the CEN Standards.

© UIAA (Union Internationale des Associations d'Alpinisme)

Copyright is secured for the present standard work including all its parts. Any use beyond the limit of the copyright act is forbidden by law.
This concerns especially copying, microfilming and feeding and processing in electronic data systems.

1. General Remarks on the UIAA Trademark and UIAA Label

1.1. The UIAA Trademark (see section 8.1.) is copyright protected internationally. The UIAA Label is only given to items of mountaineering and climbing equipment after application from the manufacturer.

1.2. The procedure to be followed by a manufacturer, when applying for a UIAA Label, is laid down in the General Regulations for the UIAA Label (see also How to Obtain a UIAA Label).

2. Scope

2.1 This standard specifies safety requirements and test methods for snow anchors for use in mountaineering.

3. Definitions

For the purpose of this standard, the following definitions apply:

3.1. Snow anchor: Anchoring plate, which can be buried in snow, fitted with a means of attachment.

3.2. Means of attachment: Any system which allows the attachment of a connector (in accordance with UIAA Standard 121).

4. Safety Requirements

4.1. Design

4.1.1. Snow anchors shall have a surface area of at least 350 cm^2.

4.1.2. All edges of the snow anchor with which the user's hand can come into contact shall be free from burrs.

4.1.3. The means of attachment shall be large enough to accommodate a pin with a diameter of at least 15 mm.

4.2 Strength

4.2.1 When tested in accordance with 4.3. the peak force shall be at least 6 kN.

5. Test Methods

5.1. Conditioning

5.1.1 Carry out the tests at a temperature of (23 ± 5) °C.

5.2. Examination of design

5.2.1. Determine the dimension of the surface of the test sample by projecting it onto a plane as shown in figure 1 and by measuring. Any hole larger than 10 cm^2 shall be subtracted from the total surface.

5.2.2. Test the unloaded eye of the means of attachment with a pin of (15 ± 0.1) mm diameter.

5.2.3. Test by tactile examination that the edges of the test samples are free from burrs.

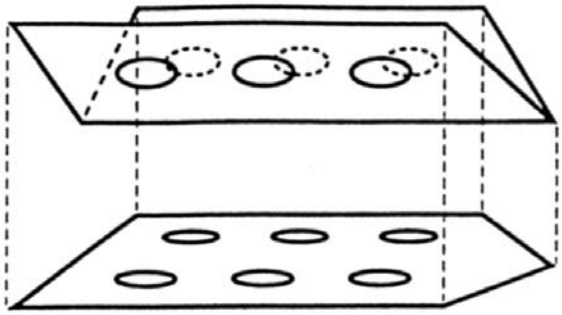

Figure 1

5.3. Strength Test

5.3.1. Apparatus – The test apparatus consists of a frame with an interior width of (80 ± 0.5) mm, the internal length shall be greater than the length of the test sample. See figure 2.

5.3.2. Procedure - The test sample is placed in the test apparatus in such a way that it does not slide and the force is applied to the means of attachment in accordance with the information to be supplied and at an angle of (50 ± 2)° with the surface of the test sample as shown in figure 2. The test sample is loaded until rupture and the peak force recorded.

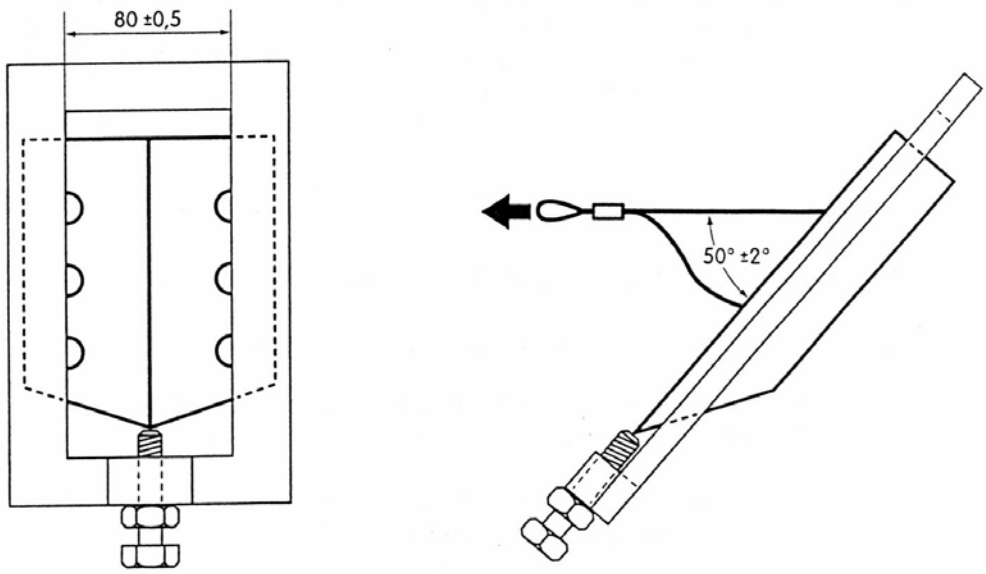

Figure 2

6. Information to be supplied

a) The name or trademark of the manufacturer, importer, or supplier;
b) The meaning of any marking on the product;
c) How the snow anchor shall be placed into the snow, how to attach to it, and how it shall be loaded;
d) A warning that the correct placement into the snow is very important to withstand a load reliably;
e) A warning that there is no guarantee that the snow anchor will withstand a high load, even when placed correctly into the snow;
f) How to choose other components for use with the product;
g) How to maintain and service the product;
h) The lifespan of the product;
i) The effects of chemical reagants and temperature on the product.

This information shall be given at least in the language of the country in which the product is sold.

7. Marking

7.1. Snow anchors shall be marked with at least the following information:

a) name or trademark of the manufacturer, importer or supplier
b) a pictogramm showing the method of use
c) the minimum holding force in kN, to the nearest whole number below the value which the manufacturer guarantees, with the unit "kN", e.g. "6 kN".

8. Demonstrating that the Requirements are met

8.1. The safety requirements shall be satisfied by either

(a) a test report from a UIAA-approved test laboratory, or

(b) a test report from a test laboratory acceptable to an EU Notified Body.

8.2. Every test shall be carried out on three items of production, and every item of production shall pass the test(s).

9. Attachment of the UIAA Label

9.1. For any model of mountaineering equipment, which has been awarded the UIAA Label, the UIAA recommends that the UIAA Trademark (see below) or the four letters "UIAA" be marked clearly, indelibly and permanently on each item sold.

9.2. In addition, the UIAA Trademark or the four letters "UIAA" may be included in the instructions for use and/or on a swing ticket as well as in catalogues and other publications of the manufacturer. In the last case, the illustration and/or the text must clearly apply only to the equipment which has been awarded the UIAA Label.