EN-13089	ICE TOOLS (Axes and Hammers)	UIAA-152

This representation of EN 13089 and UIAA 152 does not contain the full details of the test methods and requirements in these standards; it gives only a simplified pictorial presentation. For full details, EN 13089 and UIAA 152 should be consulted. © Copyright. This material may not be copied for commercial use.

Concerning the strength two types of ice tools exist in accordance with these standards:

Type Ⓑ =Basic type, with lower strength, for use in general circumstances as on glacier, for snow hiking, for ski mountaineering etc.

Type Ⓣ = Technical type, with higher strength, for use in all circumstances especially for ice climbing, dry tooling etc.

Shafts and picks shall both be marked with the symbol of the type in a circle as shown

Static tests

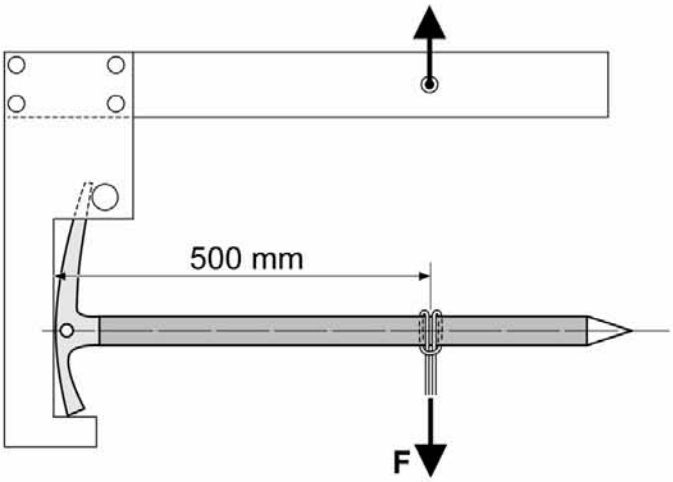

F for type Ⓑ 0,6 kN
F for type Ⓣ 0,9 kN

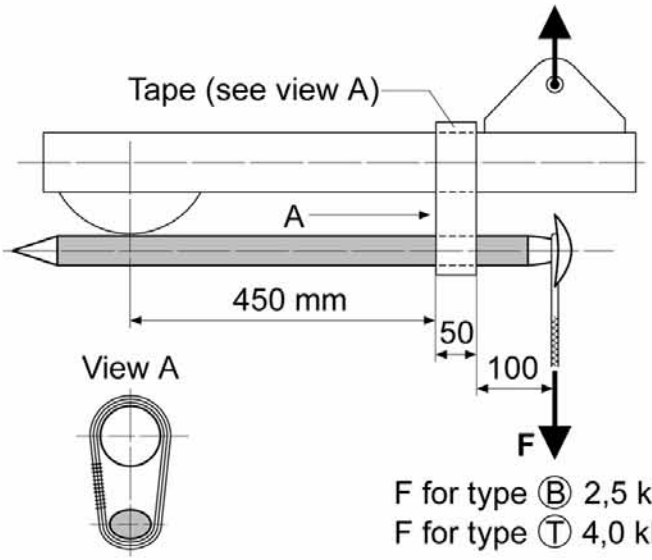

F for type Ⓑ 2,5 kN
F for type Ⓣ 4,0 kN

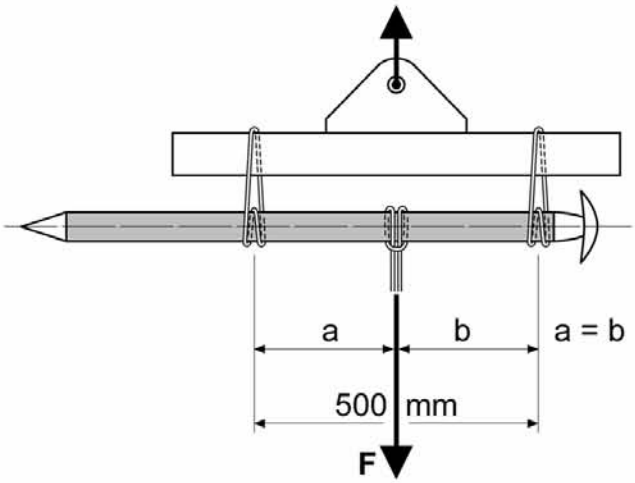

F for type Ⓑ 2,5 kN
F for type Ⓣ 3,5 kN

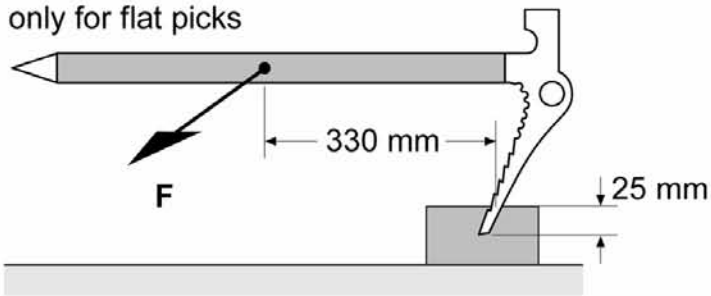

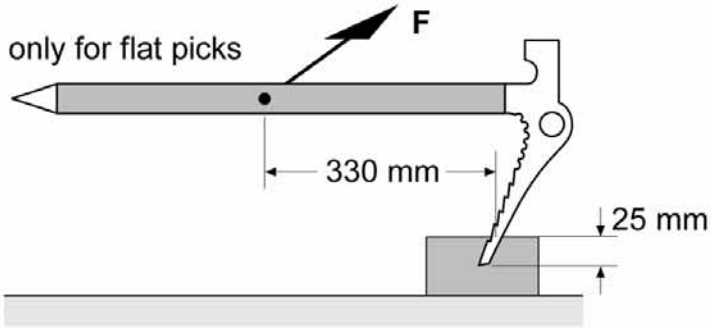

F for type Ⓑ 127 N
F for type Ⓣ 182 N

permanent deformation at the point of load after loading max. 70 mm

EN-13089	ICE TOOLS (Axes and Hammers)	UIAA-152

Fatigue tests

only for type Ⓣ

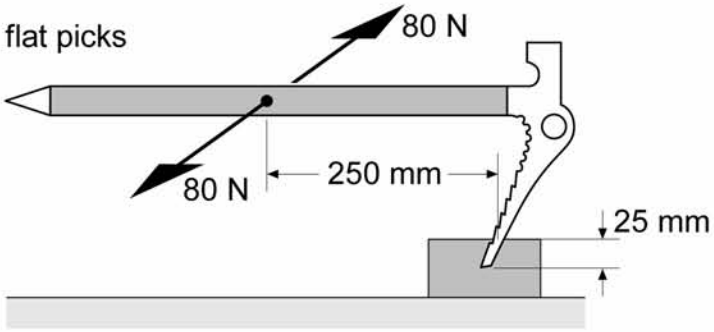

minimum 50,000 cycles

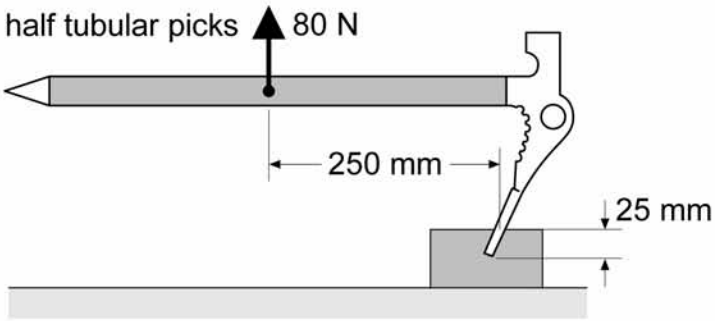

minimum 12,000 cycles

Additional UIAA requirements

Static tests

Longitudinal test for type Ⓑ and Ⓣ

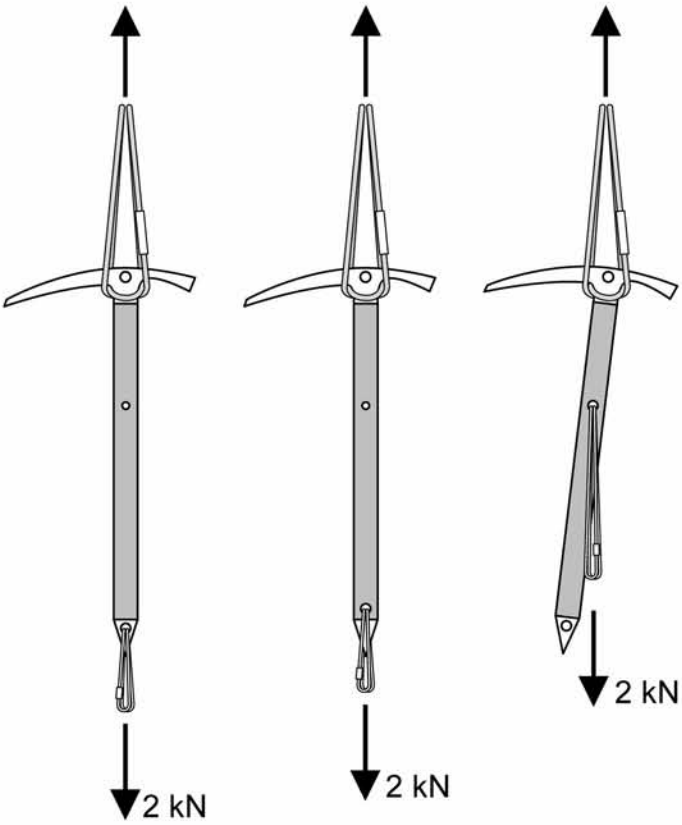
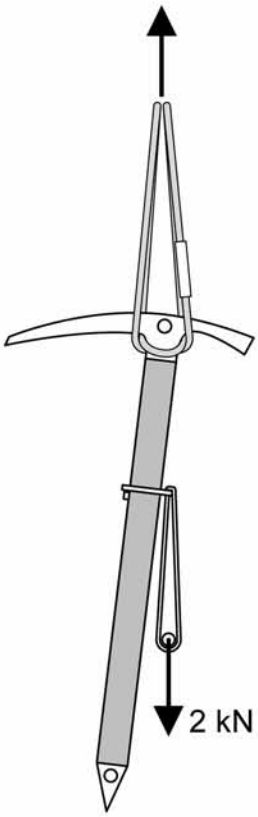
If an ice tool has a hand loop, the hand loop shall be tested