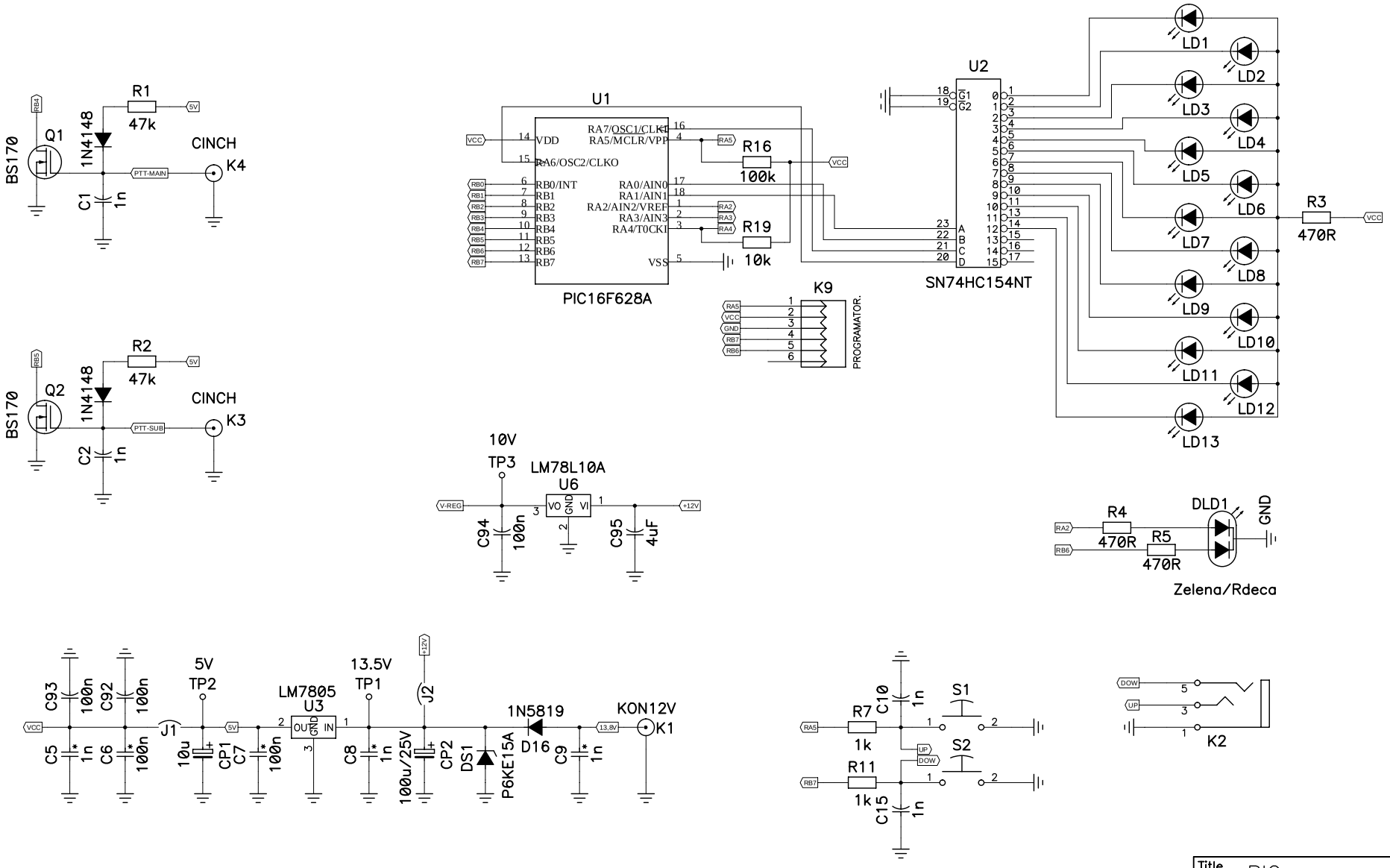

Title	PIC	
Size A3	Number S53WW	Rev
Date 7.6.2012	Drawn by S51RM	
Filename	Sheet 1 of 4	